IP version 6

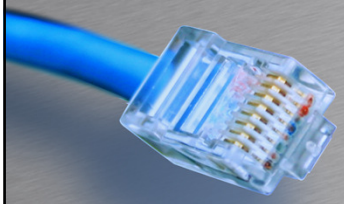

HOUSE OF TECHNOLOGY

– en del af mercantec

Kapitel 4: Routing on IPv6

Baseret på bogen: Cisco Self-study: Implementing Cisco IPv6 Networks

Henrik Thomsen V1.0

Indhold

HOUSE OF TECHNOLOGY

– en del af mercantec

- IPv6 Routetabellen
- Statiske Router
- mBGP-4
- RIP
- IS-IS
- OSPF

Administrativ afstand

- Samme som IPv4

Routing Protocol	Administrative Distance
Connected interface	0
Static route (toward the interface)	0
Static route (toward the next hop)	1
External BGP (eBGP)	20
OSPF	110
IS-IS	115
RIP	120
Internal BGP (iBGP)	200

IPv6 routetabel

mars.tekkom.dk - PuTTY

```
Campus1#show ipv6 route
IPv6 Routing Table - Default - 19 entries
Codes: C - Connected, L - Local, S - Static, U - Pe
       B - BGP, R - RIP, D - EIGRP, EX - EIGRP exte
       O - OSPF Intra, OI - OSPF Inter, OE1 - OSPF
       ON1 - OSPF NSSA ext 1, ON2 - OSPF NSSA ext 2
S   2000::/3 [1/0]
     via 2001:16D8:DD85:4::1
B   2001:16D8:DD00:10A::/64 [200/0]
     via 2001:16D8:DD85:4::1
B   2001:16D8:DD85::/48 [200/0]
     via 2001:16D8:DD85:4::1
C   2001:16D8:DD85:4::/64 [0/0]
     via Vlan1, directly connected
L   2001:16D8:DD85:4:218:18FF:FE7C:B440/128 [0/0]
     via Vlan1, receive
```

Statiske Router

Route	Forklaring
ipv6 route 2000::/3 2001:16D8:DD85:4::1	Default route
ipv6 route 2001:410::/48 fa0/0 fe80::fee4:4c01	Nettet 2001:410::/48 next hop adresse fe80::fee4:4c01. Fa0/0 nødvendig på next hop adresse er en Link-Local adresse
ipv6 route 3ffe::/16 Tunnel0	3ffe::/16 nås gennem Tunnel0 interfacet

mars.tekkom.dk - PuTTY

```
Heimdal#sh ipv6 route static
IPv6 Routing Table - Default - 7 entries
Codes: C - Connected, L - Local, S - Static, U - Per-
       B - BGP, R - RIP, D - EIGRP, EX - EIGRP externa
       O - OSPF Intra, OI - OSPF Inter, OE1 - OSPF ext
       ON1 - OSPF NSSA ext 1, ON2 - OSPF NSSA ext 2
S   2001:16D8:DD85:6000::/52 [1/0]
     via Vlan28, directly connected
```

BGP-4+ for IPv6

- BGP-4+ eller multiprotocol BGP – mBGP
- Kan bære Routingsinformation fra
  - IPv4
  - IPv6
  - VPN IPv4
  - VPN IPv6
  - Layer 2 VPN
  - NSAP

eBGP eksempel

- Multihop eBGP
  - R1 og R3 skal kunne se hinanden (pinge)
    - IGP for eksempel IS-IS
    - Statiske routes (Anvendes i eksemplet her)

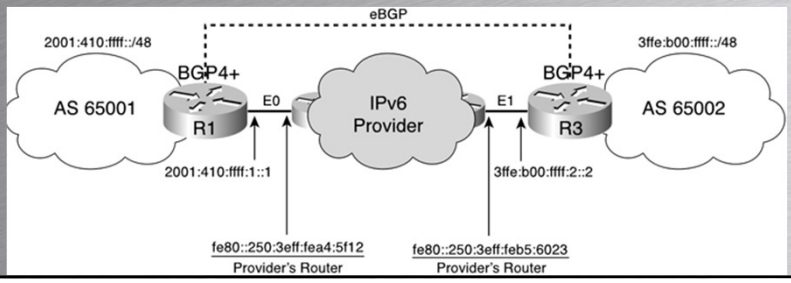

eBGP eksempel R1

```
interface e0
 ipv6 address 2001:410:ffff:1::1/64
 ipv6 nd suppress-ra
!
ipv6 route ::/0 ethernet0 fe80::250:3eff:fea4:5f12
!
router bgp 65001
 no bgp default ipv4-unicast
 bgp router-id 1.1.1.1
 neighbor 3ffe:b00:ffff:2::2 remote-as 65002
 address-family ipv6
  neighbor 3ffe:b00:ffff:2::2 activate
 exit-address-family
```

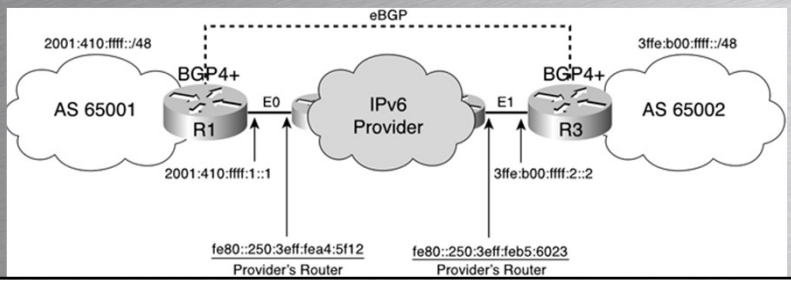

eBGP eksempel R3

```
interface e1
 ipv6 address 3ffe:b00:ffff:2::2/64
 ipv6 nd suppress-ra
!
ipv6 route ::/0 ethernet1 fe80::250:3eff:feb5:6023
!
router bgp 65002
 no bgp default ipv4-unicast
 bgp router-id 2.2.2.2
 neighbor 2001:410:ffff:1::1 remote-as 65001
 address-family ipv6
  neighbor 2001:410:ffff:1::1 activate
 exit-address-family
```

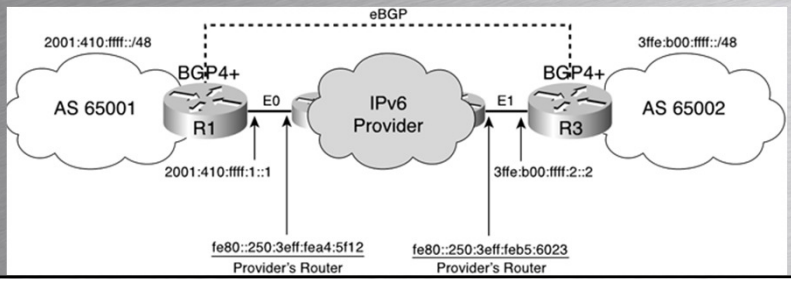

Prefix filtering eksempel

- R1 ønsker at modtage prefix'es fra R3
  - Som er mellem 3ffe::/16 og 3ffe::/24
- R1 ønsker at advisere 2001:41::/32

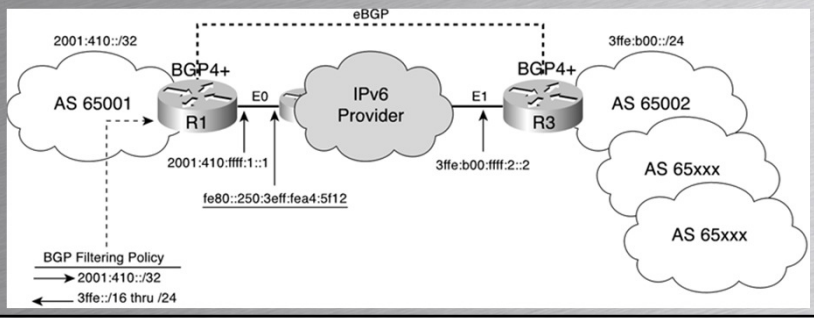

Prefix filtering 1 af 2

HOUSE OF TECHNOLOGY

mercantec

R1

```
ipv6 prefix-list outbound seq 5 permit 2001:410::/32
ipv6 prefix-list inbound seq 5 permit 3ffe::/16 le 24
!
interface e0
 ipv6 address 2001:410:ffff:1::1/64
 ipv6 nd suppress-ra
!
ipv6 route ::/0 ethernet0 fe80::250:3eff:fea4:5f12
!
```

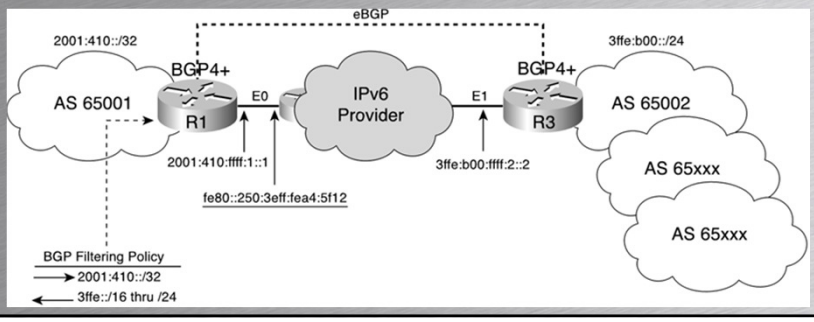

Prefix filtering 2 af 2

HOUSE OF TECHNOLOGY

mercantec

R1

```
router bgp 65001
 no bgp default ipv4-unicast
 bgp router-id 1.1.1.1
 neighbor 3ffe:b00:ffff:2::2 remote-as 65002
 address-family ipv6
  neighbor 3ffe:b00:ffff:2::2 activate
  neighbor 3ffe:b00:ffff:2::2 prefix-list outbound out
  neighbor 3ffe:b00:ffff:2::2 prefix-list inbound in
 exit-address-family
```

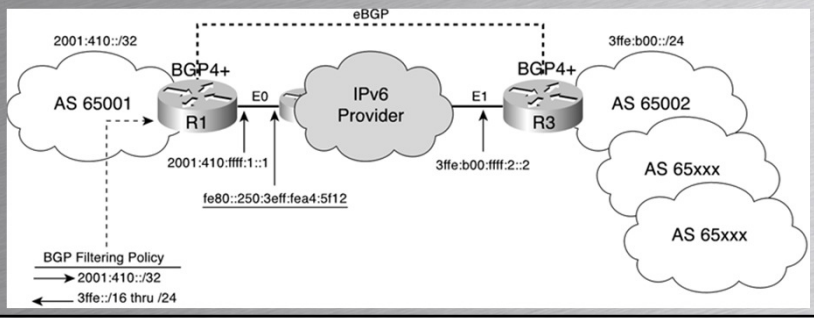

Routemap eksempel

- To veje fra R1 til IPv6 Internet
- Anvend Local-Preference til primær

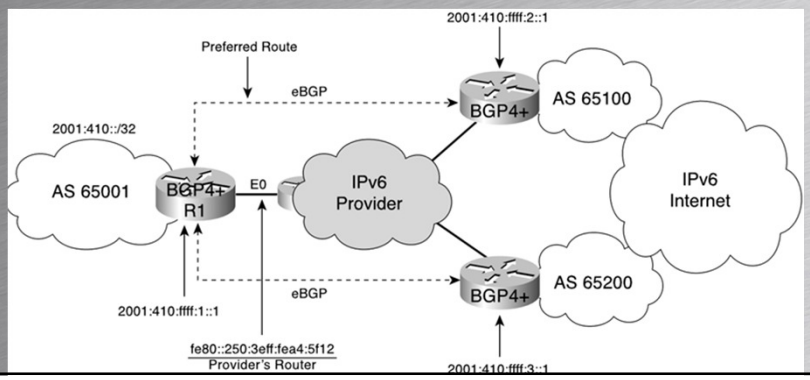

Routemap eksempel

R1

```
route-map PreferAS65100 permit 10
 set local-preference 120
!
interface e0
 ipv6 address 2001:410:ffff:1::1/64
 ipv6 nd suppress-ra
!
ipv6 route ::/0 ethernet0 fe80::250:3eff:fea4:5f12
```

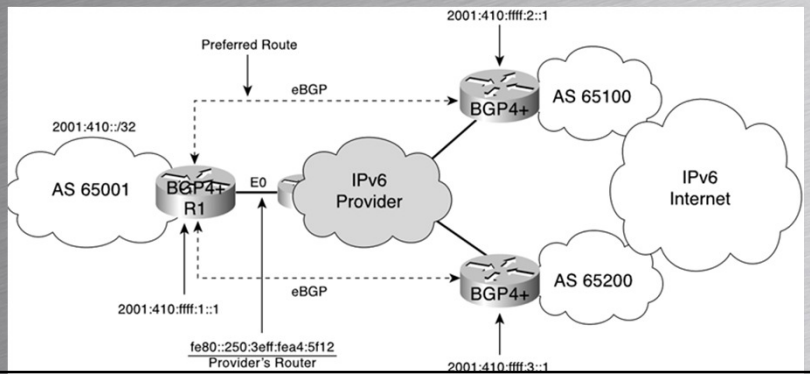

Routemap eksempel

R1

```
router bgp 65001
 no bgp default ipv4-unicast
 bgp router-id 1.1.1.1
 neighbor 2001:410:ffff:2::1 remote-as 65100
 neighbor 2001:410:ffff:3::1 remote-as 65200
 address-family ipv6
  neighbor 2001:410:ffff:2::1 activate
  neighbor 2001:410:ffff:3::1 activate
  neighbor 2001:410:ffff:2::1 route-map PreferAS65100 in
```

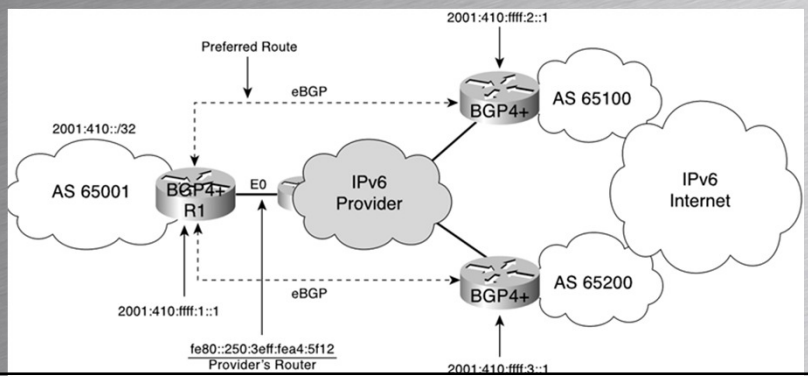

Link-local adresser

- Anvendelse af Link-Local adresser til naboer
  - Praktisk mellem ISP'er – ingen fælles net
  - Der skal anvendes Global Unicast som NEXT_HOP
    - Der skal anvendes en Route-map
    - R3 skal bruge 2001:410:ffff:1::1 som NEXT_HOP

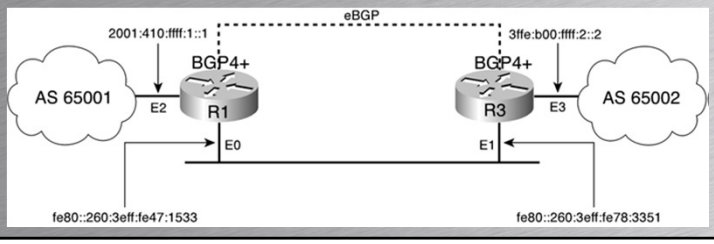

Link-local adresser

R1

```
interface e2
 ipv6 address 2001:410:ffff:1::1/64
 ipv6 nd suppress-ra
!
route-map linklocalAS65002
 set ipv6 next-hop 2001:410:ffff:1::1
!
router bgp 65001
bgp router-id 1.1.1.1
 neighbor fe80::260:3eff:fe78:3351 remote-as 65002
 neighbor fe80::260:3eff:fe78:3351 update-source ethernet0
 address-family ipv6
  neighbor fe80::260:3eff:fe78:3351 activate
  neighbor fe80::260:3eff:fe78:3351 route-map linklocalAS65002 out
```

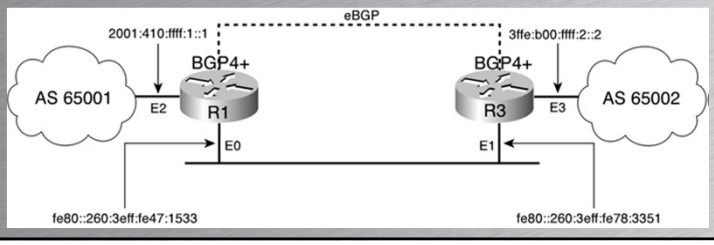

IPv4 gennem IPv6 Peers

- Annoncering af IPv4 Routes gennem IPv6
- IPv6 Routes gennem kun-IPv4 net laves på lignede måde

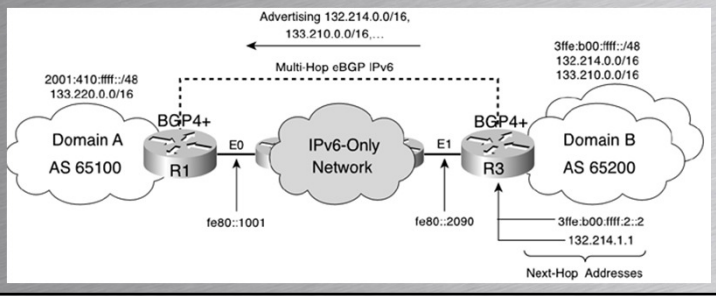

IPv4 gennem IPv6 Peers

R1

```
ipv6 route ::/0 ethernet0 fe80::1001
route-map IPv4-AS65200 permit 10
 set ip next-hop 132.214.1.1
!
router bgp 65100
 neighbor IPv6-PEER peer-group
 neighbor 3ffe:b00:ffff:2::2 remote-as 65200
 address-family ipv4
  neighbor IPv6-PEER  activate
  neighbor IPv6-PEER  soft-reconfiguration inbound
  neighbor 3ffe:b00:ffff:2::2 peer-group IPv6-PEER
  neighbor 3ffe:b00:ffff:2::2 route-map IPv4-AS65200 in
 exit-address-family
```

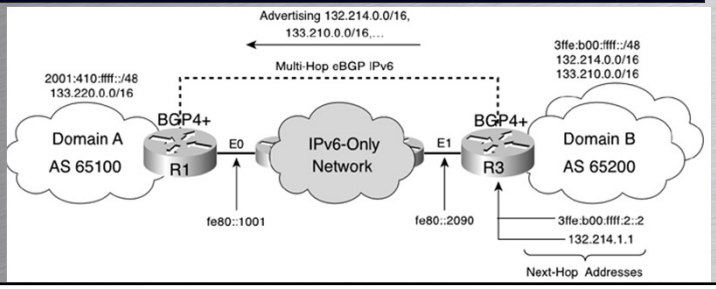

mBGP diverse

- MD5 Authentication og redistribution
  - Som ved IPv4

```
ipv6 route 2001:410:ffff::/48 fastethernet0/0 FE80::219:E7FF:FE51:8C0
ipv6 route 2001:420:ffff::/48 fastethernet0/0 FE80::654:16FF:FE18:234
!
router bgp 65001
 no bgp default ipv4-unicast
 bgp router-id 1.1.1.1
 neighbor 2001:410:ffff:2::1 remote-as 65100
 address-family ipv6
  neighbor 2001:410:ffff:2::1 password 5 HEMMELIGT
  neighbor 2001:410:ffff:2::1 activate
  redistribute static
```

IPv6 RIP eksempel

R3

```
ipv6 router rip RIPNGR3
!
int fastethernet0/1
 ipv6 address 2001:410:ffff:1::1/64
 ipv6 rip RIPNGR3 enable
 ipv6 rip default-information originate
!
int fastethernet0/0
 ipv6 address 2001:410:ffff:2::1/64
 ipv6 rip RIPNGR3 enable
 ipv6 rip default-information originate
!
ipv6 route ::/0 ethernet0
```

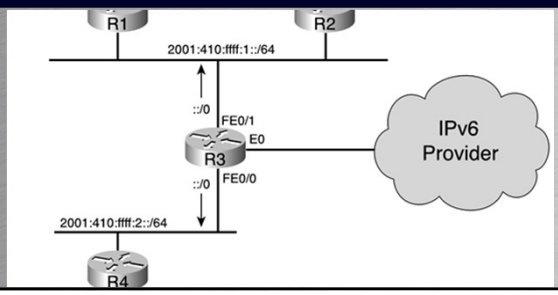

IS-IS for IPv6

- Adjacency (naboer) danner par hvis
  - De deler samme protokoller
  - Enten IPv4-only, IPv6-only eller IPv4-IPv6
- Levels som kendt under IPv4
  - Level-1
    - Intra-area Routing
  - Level-2
    - Inter-area Routing (Backbone)
  - Level-1-2
    - Intra-area og Inter-area Routing

IS-IS for IPv6

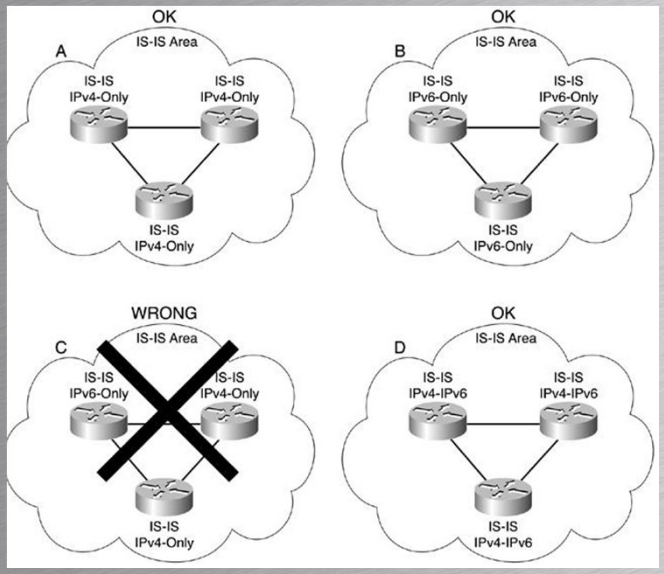

IS-IS for IPv6

- Fra IPv4-only til IPv4-IPv6 i nettet
  - Kun Adjacency med IS med samme protokoller
  - Enten skiftes alle fra IPv4-only til IPv4-IPv6
  - Eller kommandoen **`no adjacency-check`**
    - Skift en IS af gangen – Slå til igen bagefter
  -

IPv6 IS-IS eksempel

HOUSE OF TECHNOLOGY

mercantec

R1

```
hostname R1
!
router isis
 address-family ipv6
  redistribute static
 exit-address-family
 net 49.0001.1921.6801.0001.00
!
interface fastethernet0/0
 address 2001:410:ffff:1::1/64
 ipv6 router isis
 isis circuit-type level-2-only
```